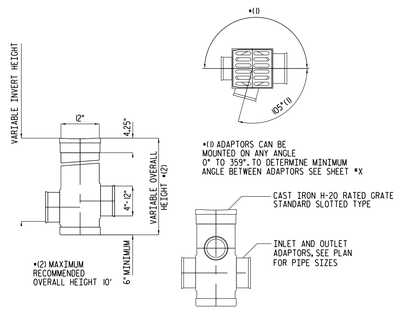

12" DRAIN BASIN

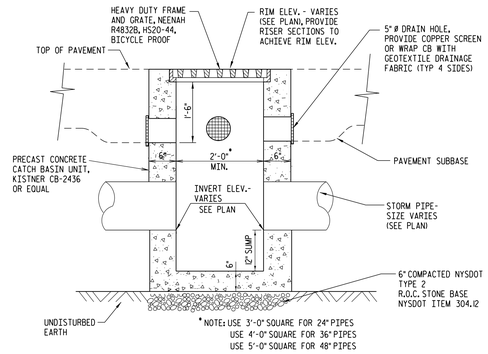

TYPICAL PRECAST CATCH BASIN

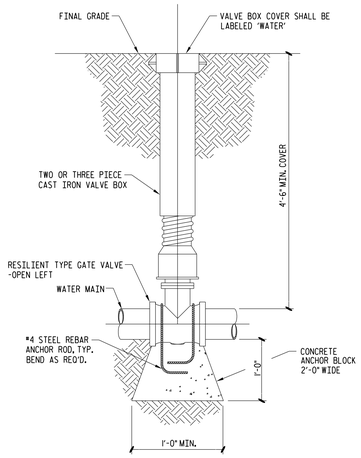

TYPICAL VALVE SETTING DETAIL

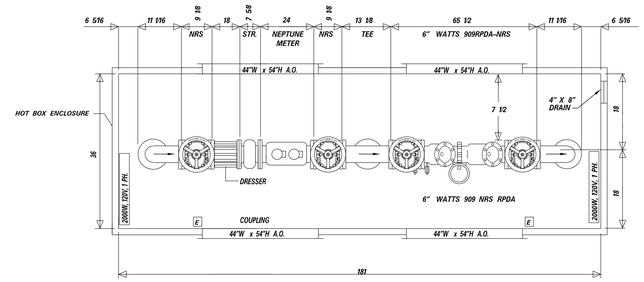

PLAN VIEW

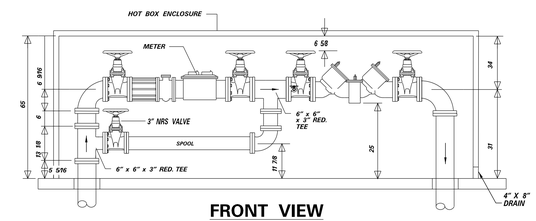

FRONT VIEW

6" WATTS 909 RPDA WITH A NEPTUNE COMPOUND METER, STRAINER AND 3" VALVED BYPASS

HOT BOX DETAIL

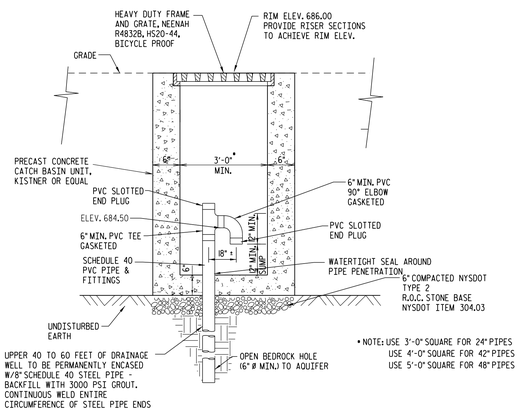

NOTES:

STORM DRAINAGE WELLS TO BE CONSTRUCTED AS MINIMUM 6-INCH DIAMETER OPEN WELLS EXTENDING BELOW EXISTING GROUND SURFACE TO AQUIFER.

THE PROPERTY OWNER SHALL CONDUCT REGULAR PERIODIC INSPECTION AND MAINTENANCE OF STORM DRAINAGE WELL(S).

MAINTENANCE TO INCLUDE REMOVAL OF ACCUMULATED OILS AND SEDIMENT FROM SUMPS IN INLETS AND WELLS AS WELL AS PERIODIC FLUSHING OF WELLS WITH WATER AND AIR.

GROUNDWATER RECHARGE WELL

NTS

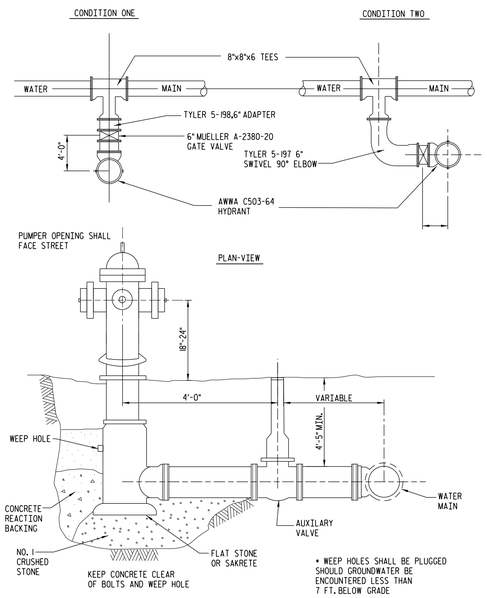

TYPICAL HYDRANT ASSEMBLY

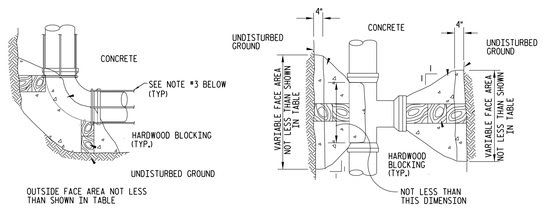

TYPICAL THRUST BLOCKING DETAILS FOR TEES, PLUGS AND BENDS

PIPE SIZE	AREA SQ. IN.	TOTAL PRESS. IN LBS.	AREA OF BLOCK IN SQUARE FEET				
			TEES PLUGS	90° BENDS	45° BENDS	22 1/2° BENDS	11 1/4° BENDS
4"	26	5,800	1.5	2.1	1.1	1.0	1.0
6"	48	10,800	2.7	3.8	2.1	1.0	1.0
8"	79	17,800	4.5	6.3	3.5	2.0	1.0
10"	114	25,700	6.4	9.0	4.9	2.5	1.25
12"	158	35,600	9.0	12.7	6.9	3.5	2.0

NOTES:
1. THRUST BLOCKS ARE TO BE CONSTRUCTED OF DRY-MIX PORTLAND CEMENT CONCRETE ATTAINING 3000 PSI AT 28 DAYS.
2. THRUST BLOCKS ARE TO BE USED IN CONJUNCTION WITH LOCKING COLLARS.
3. PROVIDE TIE-RODS OR MEGA-LUGS TO ALIGNMENT CONCRETE THRUST BLOCKS AS SHOWN.

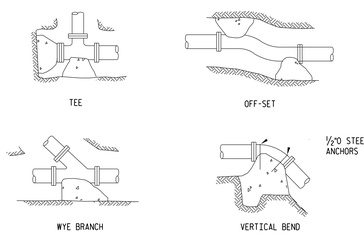

TYPICAL THRUST BLOCK PAVEMENT

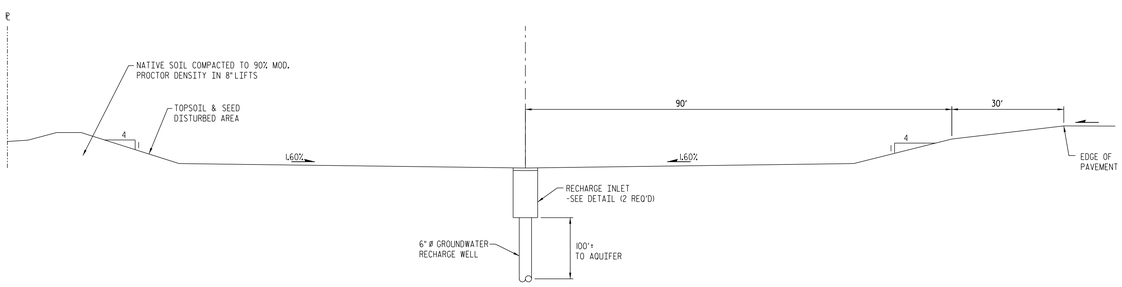

SCHEMATIC SECTION A–A THROUGH STORM WATER DETENTION POND

NTS

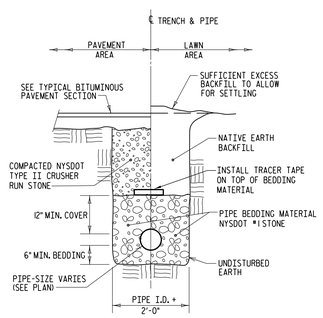

UTILITY TRENCH SECTION

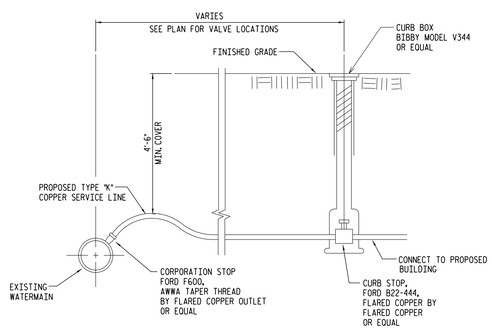

TYPICAL WATER SERVICE CONNECTION DETAIL

BAMMEL ARCHITECTS
A PROFESSIONAL CORPORATION
6524 EAST QUAKER STREET
ORCHARD PARK, NY 14127
phone (716) 662-2482
fax (716) 662-2487

CONSULTANTS:

C&S Engineers, Inc.
90 Broadway
Buffalo, New York 14203
Phone: 716-847-1630
Fax: 716-847-1454
www.cscos.com

Copyright 2010 Bammel Architects PC. all rights reserved. no part of this drawing may be reproduced or copied in any form by any means without the written permission of the architect.

Any unauthorized alteration of or addition to this drawing/document is a violation of section 7307 of the New York State education law, article 145-Architecture.

SEAL:

NEW FACILITY FOR:
INDEPENDENT HEALTH FAMILY BRANCH Y.M.C.A.
the YMCA
TECH DRIVE AMHERST, NY

OWNER:
BUFFALO NIAGARA YMCA
301 CAYUGA ROAD, SUITE 100
BUFFALO, NY 14225

ISSUE		

ISSUE DATE:	5-16-11
FILE NAME:	
PROJECT NUMBER:	H61.001.001
SCALE:	NTS
DRAWN BY:	S. SCHIENER
CHECKED BY:	B. SAWMILLER

SHEET TITLE:

SITE DETAILS

DRAWING NO:
C-502

\\workroom\bammel\architects\project files\2008.081 northtowns ymca\northtowns ymca\titleblock.dwg
Thursday, August 12, 2010
2183bd66.dgn 5/19/2011 7:07:56 AM